USBDUX

http://www.linux-usb-daq.co.uk/

Copyright (C) Bernd Porr

http://www.berndporr.me.uk

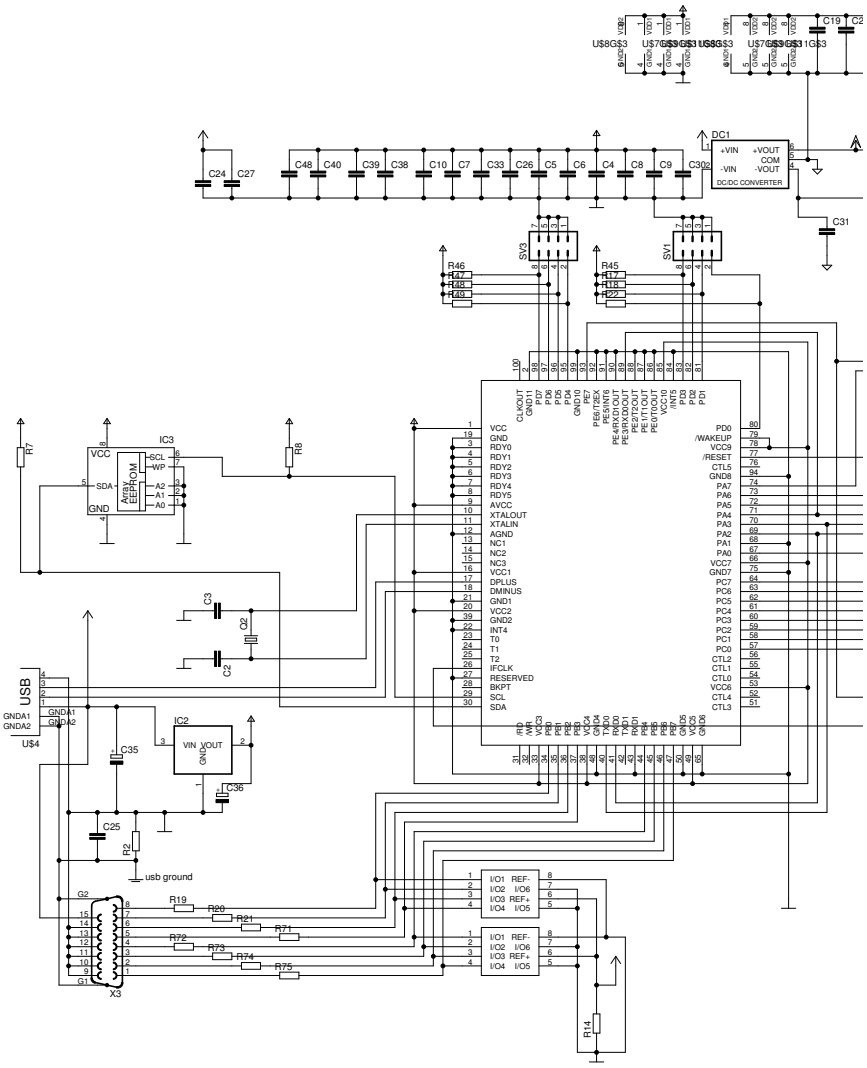

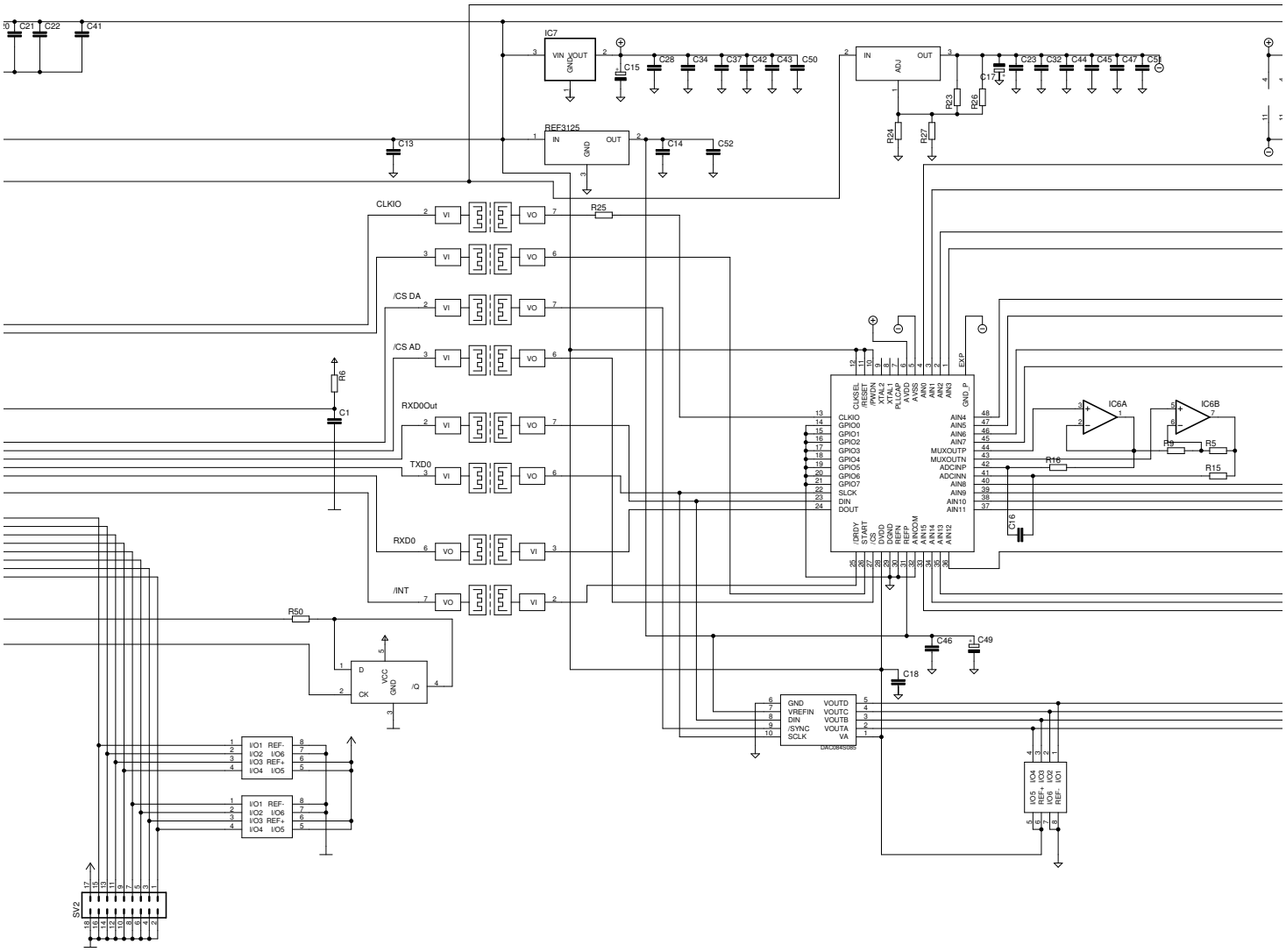
C21
C22
C41
IC7
VIN
VOUT
GND
C15
C28
C34
C37
C42
C43
C50
IN
OUT
ADJ
C17
C23
C32
C44
C45
C47
C51
R23
R26
R24
R27
REF3125
C13
C14
C52
CLKIO
VI
VO
R25
/CS DA
/CS AD
R6
C1
RXD0Out
TXD0
RXD0
/INT
R50
D
CK
VCC
GND
/Q
CLKSEL
/RESET
/PWDN
XTAL2
XTAL1
PLLCAP
AVDD
AVSS
AIN0
AIN1
AIN2
AIN3
EXP
GND_P
CLKIO
GPIO0
GPIO1
GPIO2
GPIO3
GPIO4
GPIO5
GPIO6
GPIO7
SLCK
DIN
DOUT
AIN4
AIN5
AIN6
AIN7
MUXOUTP
MUXOUTN
ADCINP
ADCINN
AIN8
AIN9
AIN10
AIN11
/DRDY
START
/CS
DVDD
DGND
REFN
REFP
AVCOM
AIN15
AIN14
AIN13
AIN12
IC6A
IC6B
R9
R5
R16
R15
C16
C46
C49
C18
GND
VREFIN
DIN
/SYNC
SCLK
VOUTD
VOUTC
VOUTB
VOUTA
VA
DAC08450B5
I/O1 REF-
I/O2 I/O6
I/O3 REF+
I/O4 I/O5
SV2

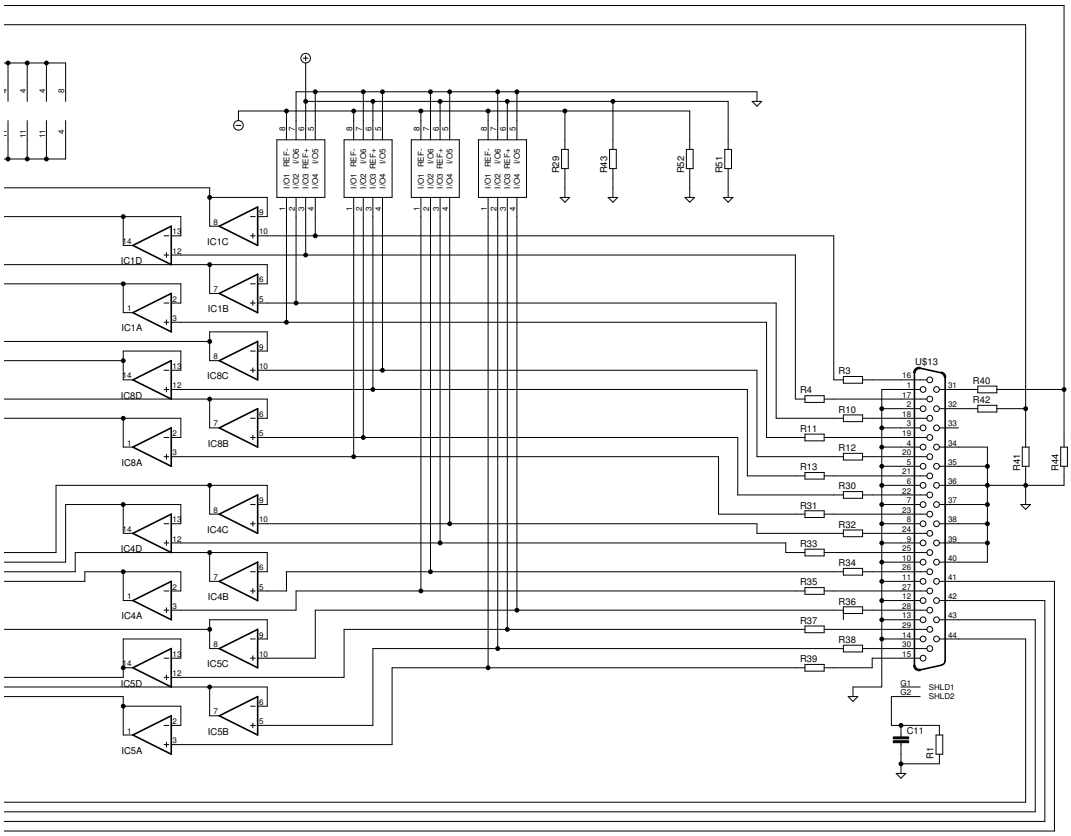
IC1D
IC1A
IC8D
IC8A
IC4D
IC4A
IC5D
IC5A
IC1C
IC1B
IC8C
IC8B
IC4C
IC4B
IC5C
IC5B
I/O1 REF- I/O6
I/O2 I/O7
I/O3 REF+ I/O5
I/O4 I/O5
R29
R43
R52
R51
U$13
R3
R4
R10
R11
R12
R13
R30
R31
R32
R33
R34
R35
R36
R37
R38
R39
R40
R42
R41
R44
G1
G2
SHLD1
SHLD2
C11
R1